babcoparts

a division of babco sales ltd.

Automotive Lift

REPAIR PARTS

ROTARY

4 POST • FLS25

babco.ca • 800-661-5313

for lift model FLS25

Put a Power Station™ on your lift and increase shop efficiency.

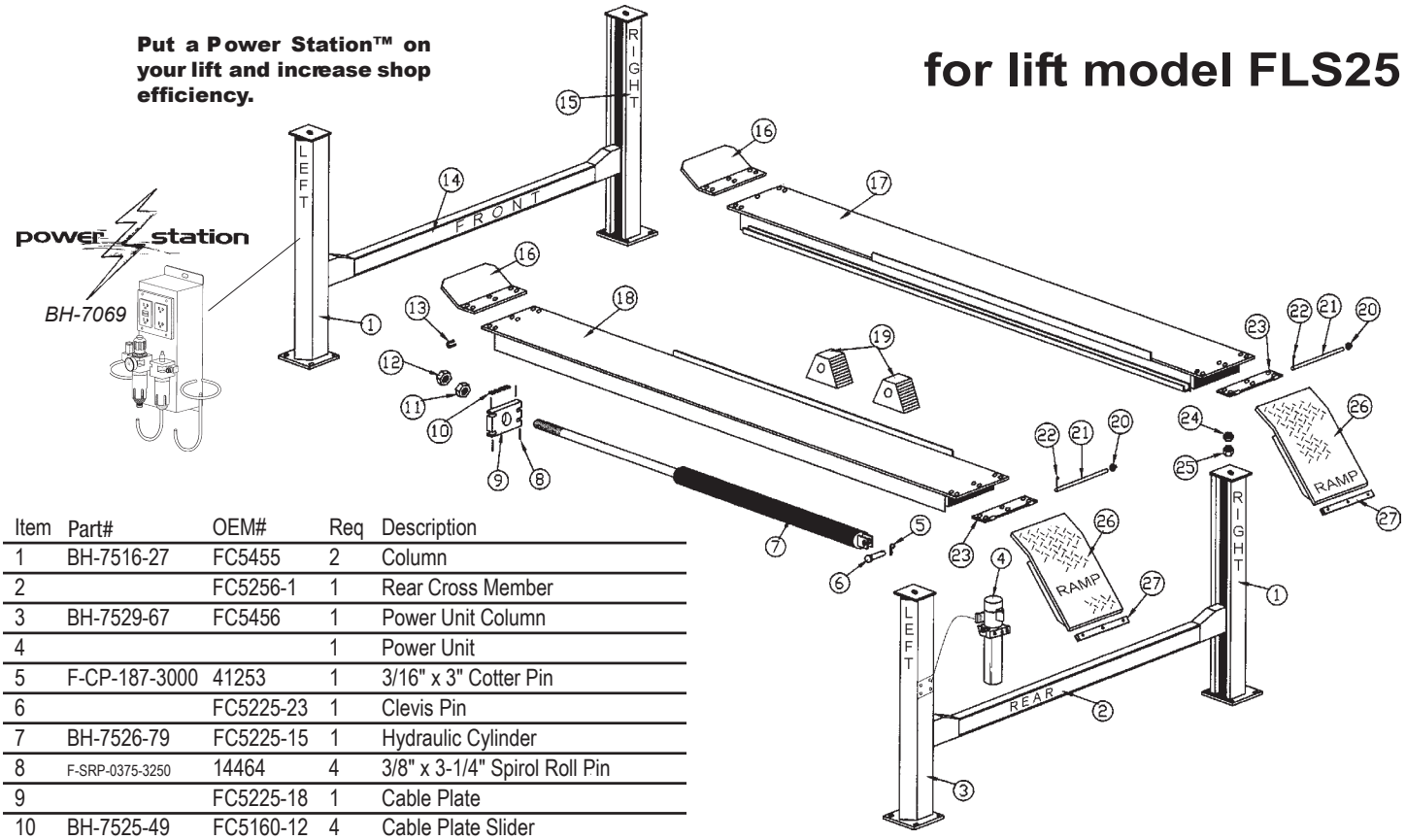

Item	Part#	OEM#	Req	Description
1	BH-7516-27	FC5455	2	Column
2		FC5256-1	1	Rear Cross Member
3	BH-7529-67	FC5456	1	Power Unit Column
4			1	Power Unit
5	F-CP-187-3000	41253	1	3/16" x 3" Cotter Pin
6		FC5225-23	1	Clevis Pin
7	BH-7526-79	FC5225-15	1	Hydraulic Cylinder
8	F-SRP-0375-3250	14464	4	3/8" x 3-1/4" Spirol Roll Pin
9		FC5225-18	1	Cable Plate
10	BH-7525-49	FC5160-12	4	Cable Plate Slider
11	F-HN-1750-05		1	1-3/4" x 5 Hex Nut
12	F-JN-1750-05		1	1-3/4" x 5 Jam Nut
13	BH-7512-90	FJ716-6		1/16" Blue Shim
14		FC5255-1	1	Front Cross Member
15	BH-7529-62	FC5454	1	Column
16	BH-7526-81	FC5225-42	2	Wheel Chock
17		FC5254-9	1	Right Runway
18		FC5254	1	Left Runway
19	BH-7524-62	FC337	4	Adjustable Wheel Stop

Item	Part#	OEM#	Req	Description
20	BH-7525-70	FC5179-4		5/8" Push Nut
21	BH-7526-87	FC5225-43	2	Hinge Pin
22	F-CP-156-1000	41202	2	5/32" x 1" Cotter Pin
23	BH-7526-90	FC5225-49	1	Hinge Plate
24	F-JN-1750-05		1	1-3/4" x 5 Jam Nut
25	F-HN-1750-05		1	1-3/4" x 5 Hex Nut
26		FC5254-14	2	Approach Ramp
27	BH-7508-78	FC134-33	2	Ramp Slide

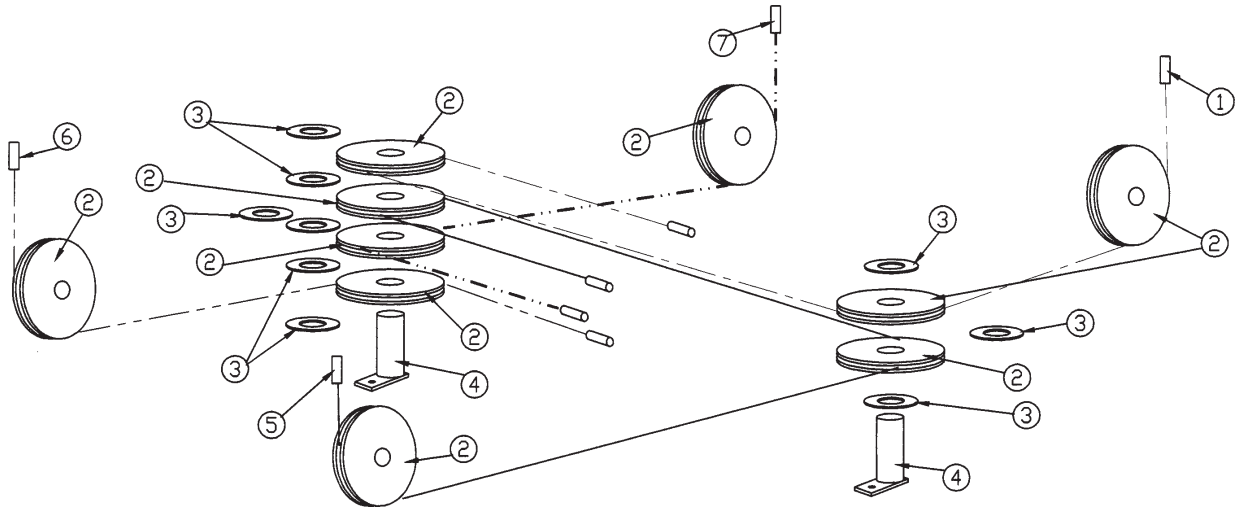

Item	Part#	OEM#	Req	Description
1	BH-7501-83	FC5254-6	1	Right Rear Cable
2	BH-7501-50	FC5225-2	10	Cable Sheave
3	BH-7501-51	FC5225-17		Spacer
4	BH-7501-52	FC5225-3	6	Sheave Pin
5	BH-7501-81	FC5254-5	1	Left Rear Cable
6	BH-7501-80	FC5254-3	1	Left Front Cable
7	BH-7501-82	FC5254-4	1	Right Front Cable

All names, numbers, symbols and descriptions are used for reference purposes only. It is not implied that any part listed is the product of these manufacturers; however, some parts may be the actual product of these manufacturers.

lock detail FLS25 series

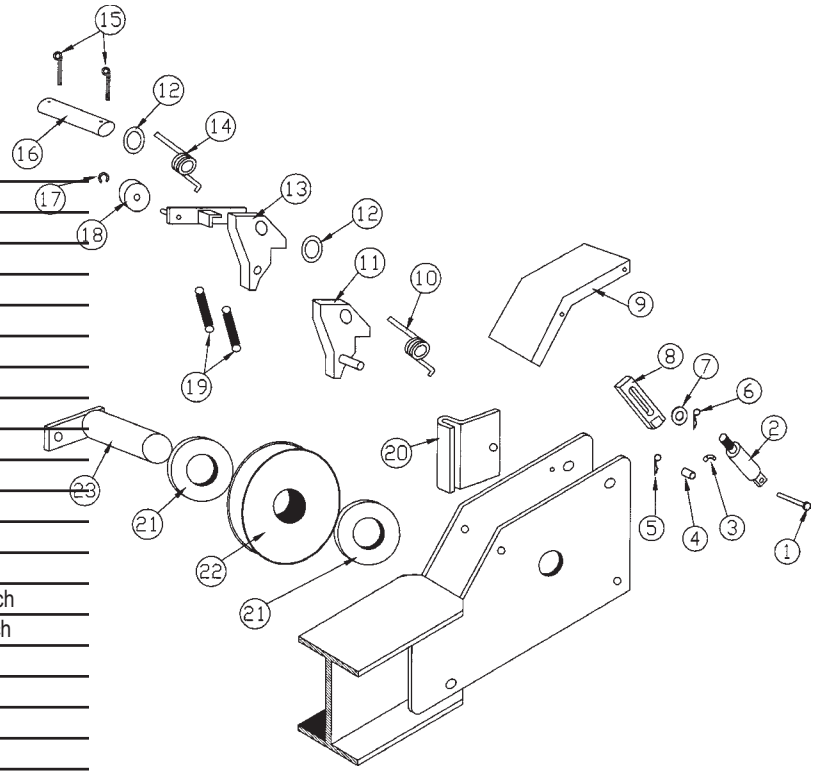

Item	Part#	OEM#	Req	Description
1	BH-7526-67	FC5224-32		Clevis Pin
2	BH-7516-46	FC5224-33	4	Air Cylinder
3	BH-7501-56	FC5224-39	4	Elbow
4	BH-7526-69	FC5224-50	4	Spacer
5	F-CP-093-0500		4	3/32" x 1/2" Cotter Pin
6	F-CP-125-1250		4	1/8" x 1-1/4" Cotter Pin
7	F-FW-0375-SAE		4	3/8" Washer
8	BH-7516-47	FC5224-35	4	Slotted Bracket
9	BH-7526-65	FC5224-30	4	Protective Cover
10	BH-7501-59R	FC5224-63	4	RH Spring
11	BH-7501-72	FC5224-16	2	RH Lock Latch
	BH-7501-71	FC5224-13	2	LH Lock Latch
12		41387	4	Spacer
13	BH-7501-74	FC5224-70	2	RH Slack Cable Lock Latch
	BH-7501-73	FC5224-71	2	LH Slack Cable Lock Latch
14		FC5224-62	4	LH Spring
15	F-CP-125-1250	41201	8	1/8" x 1-1/4" Cotter Pin
16	BH-7501-55	FC5224-17	4	Lock Shaft
17		41409	4	3/8" Waldes Truarc
18	BH-7516-32	FC5224-65	4	Sheave
19	BH-7501-61	FC522-25	8	Spring
20	BH-7508-99	FC5301-97	4	Slider
21	BH-7516-59	FC548-5	8	Bearing
22	BH-7501-50	FC5225-2	4	Cable Sheave
23	BH-7501-44	FC5224-21	4	Sheave Pin

air valve details

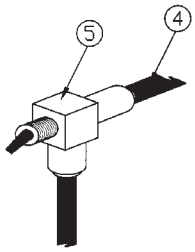

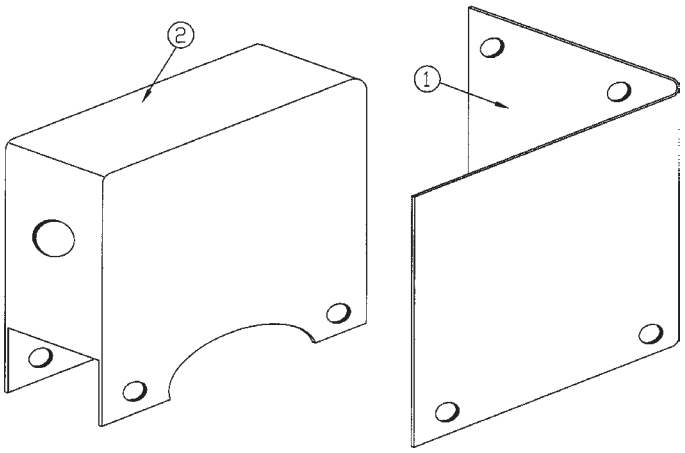

Item	Part#	OEM#	Req	Description
1	BH-7507-08	FA2230-17	1	Bracket
2	BH-7514-11	FA3134-3	1	Air Valve Housing
4		FA3134-11	1	Air Line
5	BH-7515-02	FA2273-3	1	Air Valve (toggle switch style)

Not Pictured

Part#	OEM#	Description
BH-7526-88	FC5225-46	Union Tee
	FC5225-55	Main Air Line
	FC5225-54	Short Air Line Elbow
BH-7527-05	FC5225-56	Supply Air Line
BH-7516-31	FC5225-16	Power Unit Hose
BH-7507-47	FJ7224	Hyd Elbow Fitting

All names, numbers, symbols and descriptions are used for reference purposes only. It is not implied that any part listed is the product of these manufacturers; however, some parts may be the actual product of these manufacturers.