babcoparts

a division of babco sales ltd.

Automotive Lift

REPAIR PARTS

ROTARY

4 POST • SM180

babco.ca • 800-661-5313

for lift models SM180 SM181

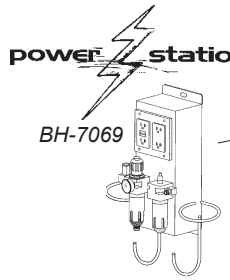

Put a Power Station™ on your lift and increase shop efficiency.

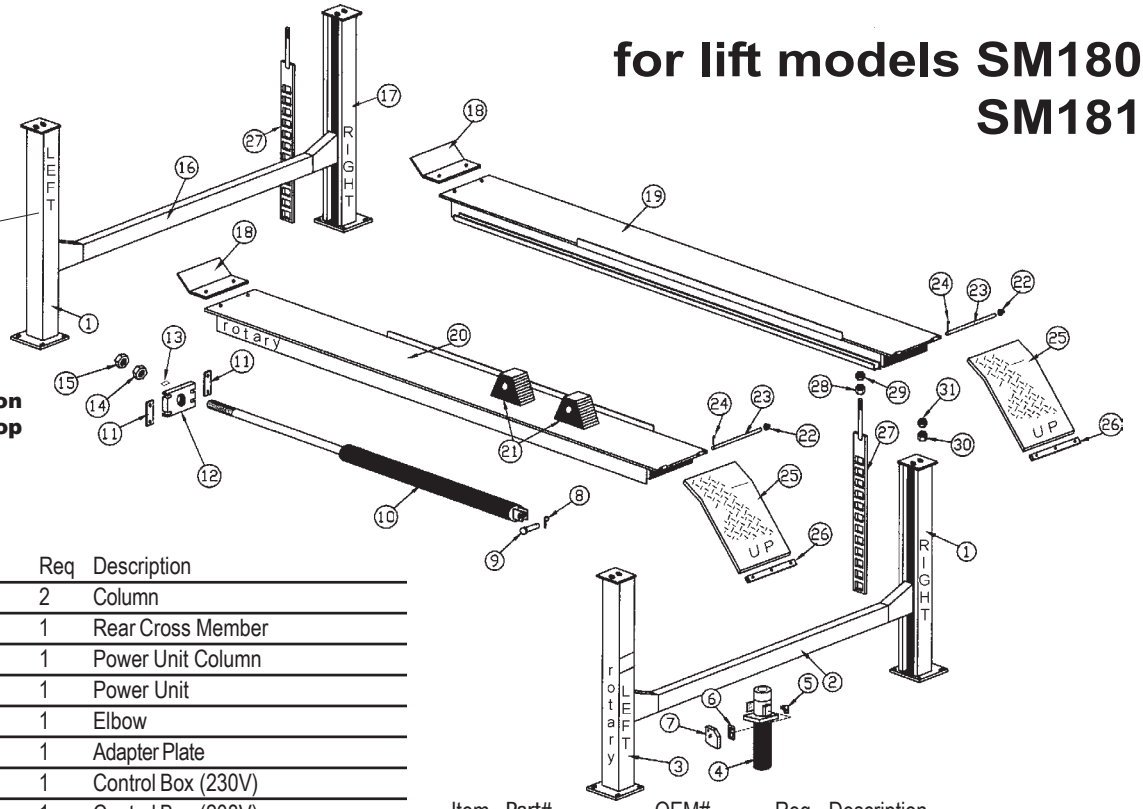

Item	Part#	OEM#	Req	Description
1	call for details	FC5814	2	Column
2	call for details	FC5773-1	1	Rear Cross Member
3	call for details	FC5815	1	Power Unit Column
4	call for details	P1002	1	Power Unit
5	call for details	P1028-4	1	Elbow
6	BH-7543-69	FA7132-2	1	Adapter Plate
7	call for details	FA7133	1	Control Box (230V)
	call for details	FA7132	1	Control Box (208V)
8	F-CP-187-1750		1	3/16" x 1-3/4" Cotter Pin
9	call for details	FC5810-17	1	Clevis Pin
10	BH-7531-65	FC5810-38	1	Hydraulic Cylinder
11	call for details	FC5810-47	2	Retainer
12	BH-7531-64	FC5810-30	1	Cable Plate
13	BH-7525-49	FC5160-12		Cable Plate Slider
14	F-HN-1500-06	40774	1	1-1/2-6 Hex Nut
15	F-JN-1500-06	40830	1	1-1/2-6 Jam Nut
16	call for details	FC5772-1	1	Front Cross Member
17	call for details	FC5814	1	Column
18	call for details	FC5810-19	2	Wheel Stop
19	call for details	FC5811	1	Right Runway (SM180)
	call for details	FC5817	1	Right Runway (SM181)

Item	Part#	OEM#	Req	Description
20	call for details	FC5810	1	Left Runway (SM180)
	call for details	FC5816	1	Left Runway (SM181)
21	BH-7524-62	FC337	4	Adjustable Wheel Stop
22	BH-7525-70	FC5179-4	2	5/8" Push Nut
23	BH-7517-78	FC134-99	2	Hinge Pin
24	F-CP-156-1000	41202	2	5/32" x 1" Cotter Pin
25	BH-7531-79	FC5810-45	2	Approach Ramp
26	BH-7508-78	FC134-33	2	Ramp Slide
27	BH-7531-74	FC5814-11	4	Lock Ladder
28	F-HN-0750-10		4	3/4-10 Hex Nut
29	F-JN-0750-10		4	3/4-10 Jam Nut
30	F-HN-1000-08		4	1-8 Hex Nut
31	F-JN-1000-08		4	1-8 Jam Nut

Item	Part#	OEM#	Req	Description
1	BH-7531-63	FC5810-14	1	Right Rear Cable (SM180)
	BH-7531-82	FC5816-14	1	Right Rear Cable (SM181)
2	BH-7531-56	FC5810-10	8	Sheave

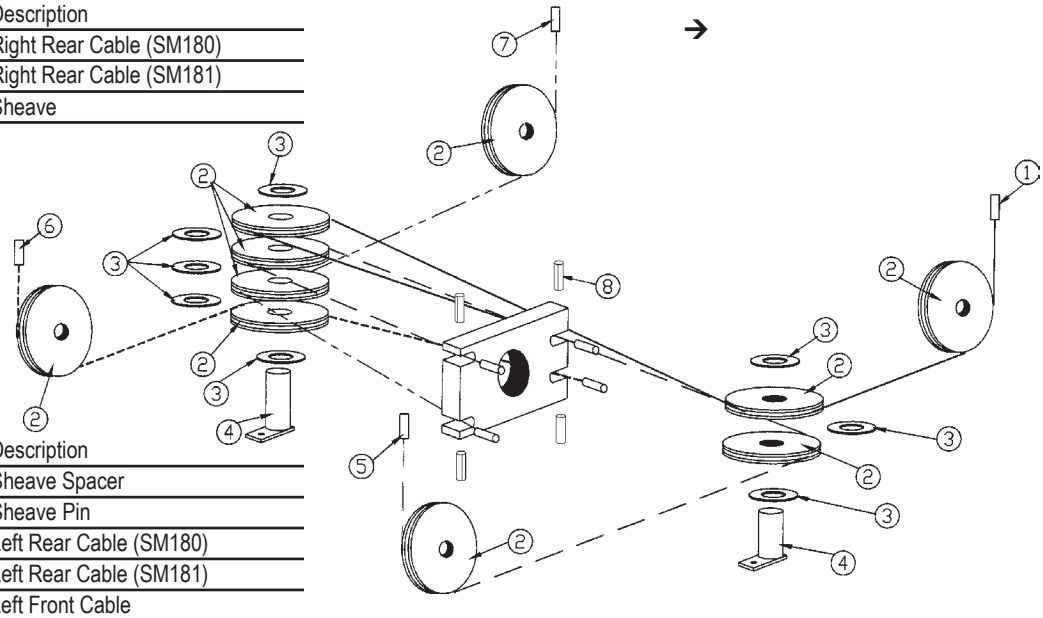

Item	Part#	OEM#	Req	Description
3	BH-7501-51	FC5225-17	8	Sheave Spacer
4	BH-7531-78	FC5810-40	2	Sheave Pin
5	BH-7531-61	FC5810-13	1	Left Rear Cable (SM180)
	BH-7531-83	FC5816-13	1	Left Rear Cable (SM181)
6	BH-7531-54	FC5810-11	1	Left Front Cable
7	BH-7531-52	FC5810-12	1	Right Front Cable
8	F-RP-375-3250	14464		3/8" x 3-1/4" Roll Pin

All names, numbers, symbols and descriptions are used for reference purposes only. It is not implied that any part listed is the product of these manufacturers; however, some parts may be the actual product of these manufacturers.

lock detail SM180 / SM181 series

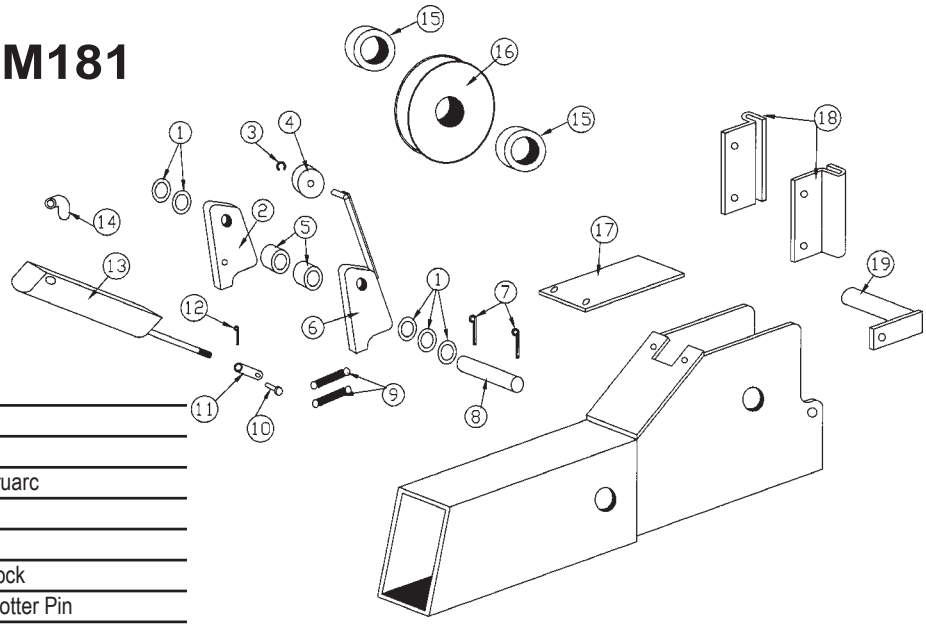

Item	Part#	OEM#	Req	Description
1	BH-7510-15	FC5301-98		Spacer
2	BH-7531-72	FC5812-29	4	Lock Latch
3	call for details	41409	4	3/8" Waldes Truarc
4	BH-7517-24	FC553-21	4	Sheave
5	BH-7533-11	FC5812-28	8	Spacer
6	BH-7531-71	FC5812-27	4	Slack Cable Lock
7	F-CP-125-1250		8	1/8" x 1-1/4" Cotter Pin
8	BH-7501-55	FC5224-17	4	Lock Shaft
9	BH-7501-61	FC522-25	8	Spring
10	BH-7507-06	FA2230-12		Clevis Pin
11	call for details		4	Clevis
12	call for details			1/4" Cotter
13	BH-7530-90	FC5706-17	4	Air Cylinder (1 port)
	BH-7503-94	FC5708-2	4	Air Cylinder (2 Port)

Item	Part#	OEM#	Req	Description
14	BH-7501-56	FC5224-39	4	Elbow
15	BH-7532-46	FC5927-10	8	Sheave Spacer
16	BH-7531-56	FC5810-10		Sheave
17	BH-7516-76	FC553-10	4	Rubber Cover
18	BH-7531-70	FC5812-10	8	Slider Guide
19	BH-7501-44	FC5224-21	4	Sheave Pin

air valve details

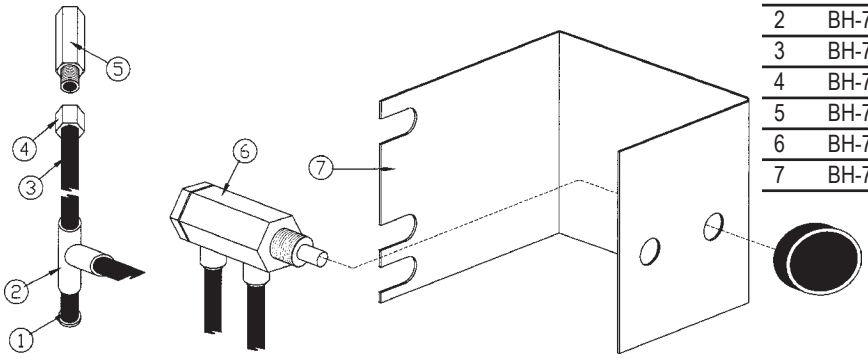

Item	Part#	OEM#	Req	Description
1	BH-7507-07	FA2230-16		3/8" Plugger
2	BH-7507-04	FA2242-1		Union Tee
3	BH-7507-02	FA2230-15		3/8" Tubing (40' roll)
4	BH-7514-10	FA3134-13		Female Connector
5	BH-7514-09	FA3134-12		In-Line Filter
6	BH-7504-19	FA3216		Air Valve
7	BH-7504-19B	FA3217		Air Valve Bracket

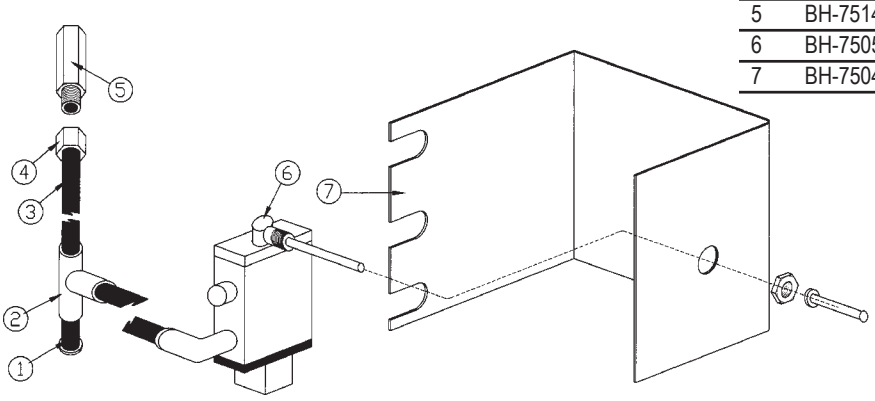

Item	Part#	OEM#	Req	Description
1	BH-7507-07	FA2230-16		3/8" Plugger
2	BH-7507-04	FA2242-1		Union Tee
3	BH-7507-02	FA2230-15		3/8" Tubing (40' roll)
4	BH-7514-10	FA3134-13		Female Connector
5	BH-7514-09	FA3134-12		In-Line Filter
6	BH-7505-19	T140073		Air Valve
7	BH-7504-19B	FA3217		Air Valve Bracket

All names, numbers, symbols and descriptions are used for reference purposes only. It is not implied that any part listed is the product of these manufacturers; however, some parts may be the actual product of these manufacturers.