HEIN-WERNER AUTOMOTIVE®

Hydraulic Transmission Jack

Operating Instructions & Parts Manual

Model Number
HW93718

Capacity
1 Ton

Made in the U.S.A.

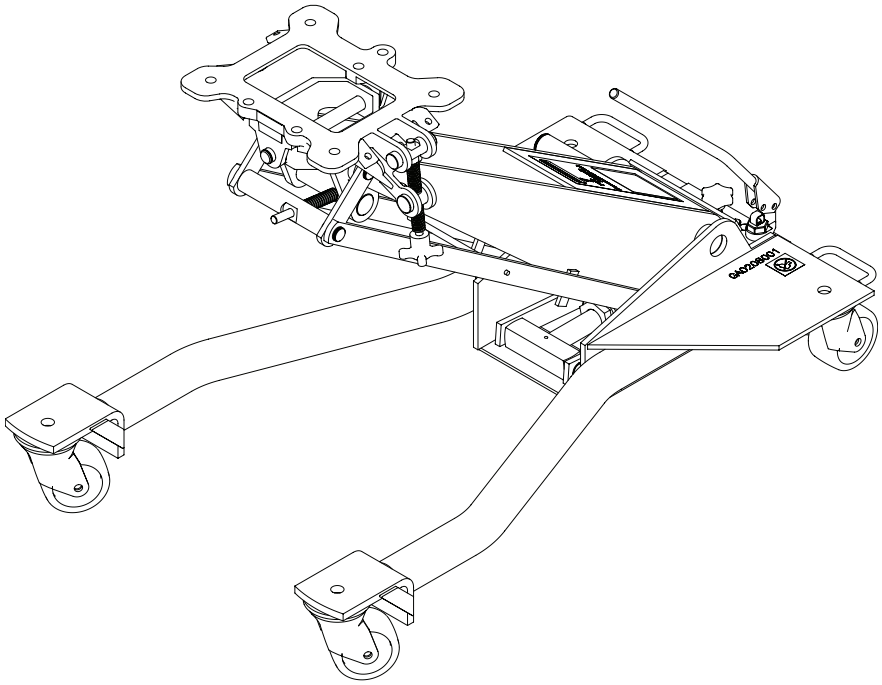

This is the safety alert symbol. It is used to alert you to potential personal injury hazards. Obey all safety messages that follow this symbol to avoid possible injury or death.

SFA Companies
10939 N. Pomona Ave. Kansas City, MO 64153
customerservices@heinwerner-automotive.com

Read this manual and follow all the Safety Rules and Operating Instructions before using this product.

HW93718-M1_122011

SAFETY AND GENERAL INFORMATION

Save these instructions. For your safety, read, understand, and follow the information provided with and on this jack. The owner and operator of this equipment shall have an understanding of this jack and safe operating procedures before attempting to use. The owner and operator shall be aware that use and repair of this product may require special skills and knowledge. Instructions and safety information shall be conveyed in the operator's native language before use of this jack is authorized. If any doubt exists as to the safe and proper use of this jack, remove from service immediately.

Inspect before each use. Do not use if there are broken, bent, cracked, or damaged parts (including labels). Any jack that appears damaged in any way, operates abnormally or is missing parts, shall be removed from service immediately. If the jack has been or suspected to have been subjected to a shock load (a load dropped suddenly, unexpectedly upon it), immediately discontinue to use until jack has been checked by a Hein-Werner authorized service center (contact distributor or manufacturer for list of Authorized Service Centers). It is recommended that an annual inspection be done by qualified personnel. Replace worn or damaged parts with Hein-Werner Authorized Replacement Parts only. Labels and Operator's Manuals are available from manufacturer.

PRODUCT DESCRIPTION

Hein-Werner Hydraulic Transmission Jack is designed to be used as an aid in the removal and installation of automotive and light truck transmissions, transfer cases and transaxles. This jack is for use under portable lift equipment, where vehicle must be supported by a pair of appropriately rated vehicle stands.

⚠ **WARNING:** *DO NOT use for any purpose other than those uses outlined above.*

SPECIFICATIONS

Model	Capacity	Min. Height	Max. Height	Saddle Base	Expanded Saddle Area	Jack Size (L x W)	Gross Weight
HW93718	1 Ton	10-1/4"	44-3/4"	18-9/16" x 12-3/8"	18-9/16" x 18-3/8"	47-1/2" x 28"	309 lb.

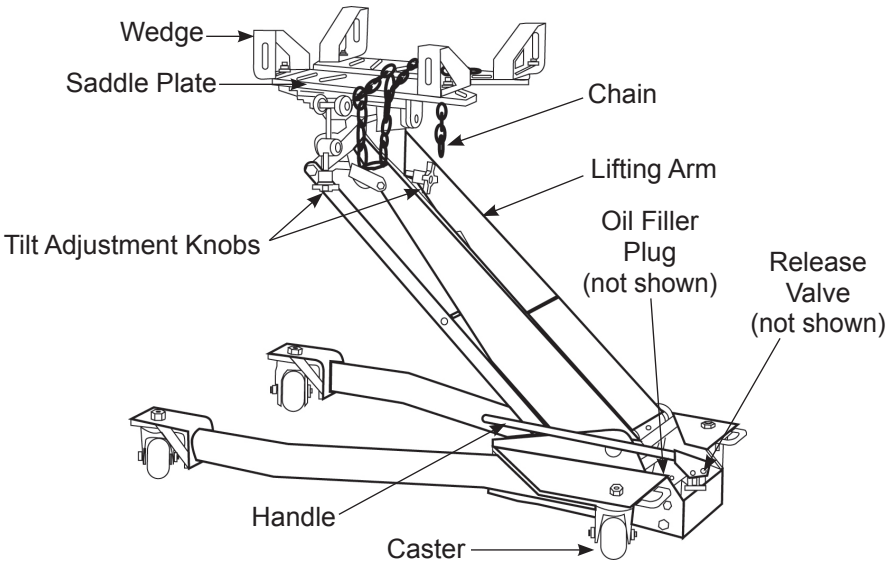

Figure 1- Model HW93718 Nomenclature

⚠ WARNING

- Study, understand, and follow all instructions before operating this device.
- Do not exceed rated capacity.
- Use only on hard, level surfaces.
- Adequately support the vehicle before starting repairs.
- Use of this product is limited to the removal, installation and transportation in the lowered position, of transmissions, transfer cases and transaxles.
- No alterations shall be made to this product.
- Only attachments and/or adapters supplied by the manufacturer shall be used.
- Failure to heed these markings may result in personal injury and/or property damage.

⚠ WARNING

To avoid crushing and related injuries: NEVER work on, under or around a load supported only by jack. Immediately transfer the load to an appropriate work station.

ASSEMBLY

Wedges: Align the hole in the wedge with the hole in the saddle assembly. Secure with the nut, washer, and bolt. Repeat for the other three wedges.

Chain: Insert the bolt through one hole of the saddle assembly (lowest to the ground) if accessible. If the assembly is extended, insert the bolt through one hole of the adjustment plate. Secure with washer and wingnut.

BEFORE USE

1. Verify that the product and the application are compatible, if in doubt call Hein-Werner Technical Service (816) 891-6390.
2. Read the operator's manual completely and familiarize yourself thoroughly with the product, its components and recognize the potential hazards associated with its use ***before*** using this product.
3. Lower saddle fully, locate and remove oil filler plug. This will help to release any pressurized air that may be trapped within the reservoir.

⚠ ADVERTENCIA

- Leer, comprender, y seguir las instrucciónes antes de utilizar el aparato.
- El manual de instrucciónes y la información de seguridad deben estar comunicado en lengua del operador antes del uso.
- No seguir estas indicaciónes puede causar daños personales o materiales.

4. Ensure the hydraulic fluid level is within ~3/16" from the inner cylinder as viewed from the oil filler hole. Reinstall oil filler plug.
5. Replace worn or damaged parts and assemblies with Hein-Werner replacement parts only. Lubricate as instructed in Maintenance Section.

OPERATION (see Fig. 1 & 3)

Raising Saddle Assembly

1. Locate and close release valve by turning it clockwise firmly, then pump the handle until the load is contacted.
2. Follow vehicle manufacturers recommended procedures for removing the load as outlined in vehicle service manual or repair guide.
3. Secure load with provided chains.

⚠ **WARNING:** *Ensure the transmission is centered on the jack. An off-center transmission could cause the jack to tip over resulting in personal injury or property damage. For your safety, do not exceed 10 degree tilt angle of the saddle assembly in all directions.*

Lowering Saddle Assembly

⚠ **WARNING:** *Clear all tools and personnel before lowering load.*

⚠ **WARNING:** *Dynamic shock loads are created by quickly opening and closing the release valve as the load is being lowered. The resulting overload may cause hydraulic system failure.*

1. Secure the load to the jack with provided chain.
2. *Slowly* turn release valve counter-clockwise to lower load. No more than 1/2 full turn until load is fully lowered.
3. Immediately transfer the load to an appropriate repair fixture.

MAINTENANCE

NOTICE: *Use only quality hydraulic jack fluid. Avoid mixing different types of fluid and NEVER use brake fluid, turbine oil, transmission fluid, motor oil, or glycerin. Improper fluid can cause failure of the jack and the potential for sudden and immediate loss of load. Hein-Werner hydraulic jack oil HW93291 or equivalent is recommended.*

Adding Fluid

1. With saddle fully lowered, set jack in its upright, level position. Locate and remove oil filler plug.
2. Fill with oil until ~3/16" above the inner cylinder as seen from the oil filler hole. Reinstall oil filler plug.

Changing Fluid

For best performance and longest life, replace hydraulic fluid at least once a year.

1. With saddle fully lowered, and pump piston fully depressed, remove oil filler plug.
2. Lay the jack on its side and drain the fluid into a suitable container.

NOTICE: *Dispose of hydraulic fluid in accordance with local environmental regulations.*

3. Set jack in its level, upright position and fill until ~3/16" above the inner cylinder as seen from the filler hole. Reinstall oil filler plug.

Lubrication

A periodic coating of light lubricating oil to pivot points, axles, and hinges will help to prevent rust and assure that wheels, castors, and pump assemblies move freely.

Cleaning

Periodically inspect the ram for signs of rust or corrosion. Clean as needed and wipe with an oily cloth.

NOTICE: *Never use sandpaper or abrasive material on these surfaces.*

Storage

When not in use, store the jack with ram fully retracted.

REPLACEMENT PARTS

(refer to pages 6 & 7)

Not all components of the jack are replacement items, but are illustrated as a convenient reference of location and position in the assembly sequence. When ordering parts, give model number, part number and parts description. Call or write for current pricing: Hein-Werner Customer Support, 10939 N. Pomona Ave. Kansas City, MO 64153. Phone: (816) 891-6390; E-mail: customerservices@heinwerner-automotive.com

TROUBLESHOOTING

Symptom	Possible Causes	Corrective Action
Jack will not lift load	• Release valve not tightly closed • Overload condition	• Ensure release valve tightly closed • Remedy overload condition
Jack will lift, but not maintain pressure	• Release valve not tightly closed • Overload condition • Hydraulic unit malfunction	• Ensure release valve tightly closed • Remedy overload condition • Contact Tech. Service
Jack will not lower after unloading	• Reservoir overfilled • Linkage binding	• Ensure load is removed, then drain fluid to proper level • Clean and lubricate moving parts
Poor lift performance	• Fluid level low • Air trapped in system	• Ensure proper fluid level • With saddle fully lowered, remove oil filler plug to let pressurized air escape, then reinstall oil filler plug
Jack will not lift to full extension	• Fluid level low	• Ensure proper fluid level

HEIN-WERNER AUTOMOTIVE®

TWO YEARS LIMITED WARRANTY

For a period of two (2) years from date of purchase, SFA Companies will repair or replace, at its option, without charge, any of its products which fails due to a defect in material or workmanship under normal usage. This limited warranty is a consumer's exclusive remedy.

Performance of any obligation under this warranty may be obtained by returning the warranted product, freight prepaid, to SFA Companies Warranty Service Department, 10939 N. Pomona Ave., Kansas City, MO 64153.
Except where such limitations and exclusions are specifically prohibited by applicable law:

(1) THE CONSUMER'S SOLE AND EXCLUSIVE REMEDY SHALL BE THE REPAIR OR REPLACEMENT OF DEFECTIVE PRODUCTS AS DESCRIBED ABOVE
(2) SFA COMPANIES SHALL NOT BE LIABLE FOR ANY CONSEQUENTIAL OR INCIDENTAL DAMAGE OR LOSS WHATSOEVER.
(3) ANY IMPLIED WARRANTIES, INCLUDING WITHOUT LIMITATION THE IMPLIED WARRANTIES OF MERCHANTABILITY AND FITNESS FOR A PARTICULAR PURPOSE, SHALL BE LIMITED TO TWO YEARS, OTHERWISE THE REPAIR, REPLACEMENT OR REFUND AS PROVIDED UNDER THIS EXPRESS LIMITED WARRANTY IS THE EXCLUSIVE REMEDY OF THE CONSUMER, AND IS PROVIDED IN LIEU OF ALL OTHER WARRANTIES, EXPRESS OR IMPLIED.
(4) ANY MODIFICATION, ALTERATION, ABUSE, UNAUTHORIZED SERVICE OR ORNAMENTAL DESIGN VOIDS THIS WARRANTY AND IS NOT COVERED BY THIS WARRANTY.

Some states do not allow limitations on how long an implied warranty lasts, so the above limitation may not apply to you. Some states do not allow the exclusion or limitation of incidental or consequential damages, so the above limitation or exclusion may not apply to you. This warranty gives you specific legal rights, and you may also have other rights which vary from state to state.

Model HW93718 Replacement Parts (Frame)

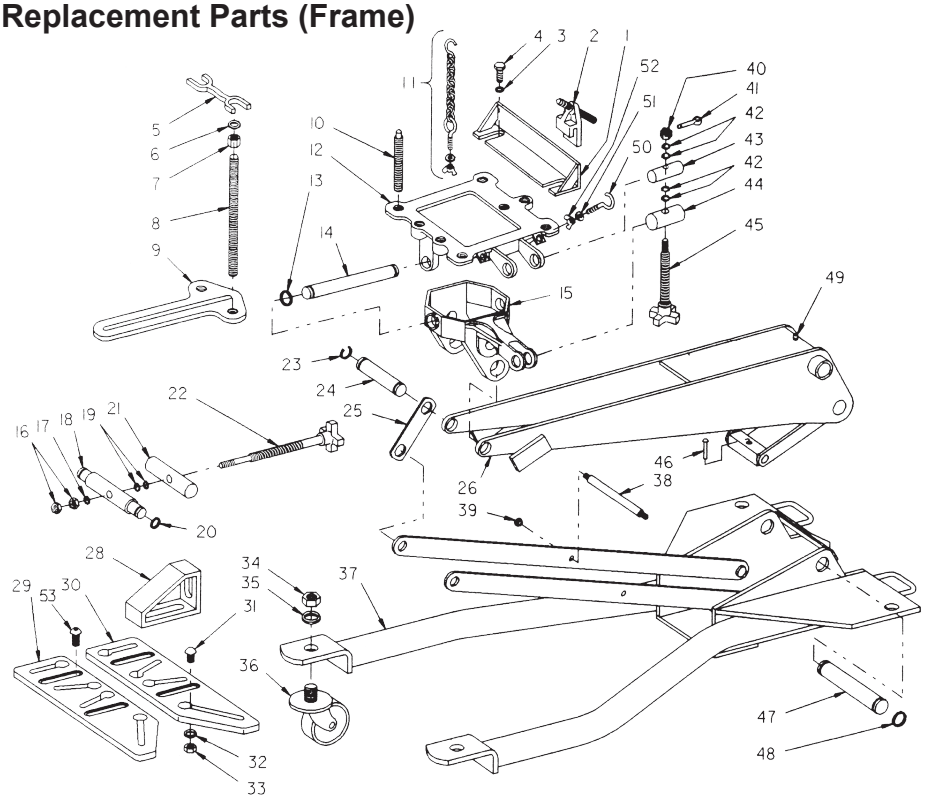

Figure 2 - Parts Illustration for Model HW93718 (Frame)

Item	Part#	Description	Qty
1*	N/A	Adj. Angle Assembly	2
2*	N/A	Adj. Stud Bracket	2
3*	N/A	Washer	6
4*	N/A	Hex Hd. Cap Screw	6
5*	N/A	Yoke Clamp	2
6*	N/A	Washer	4
7*	N/A	Hex Nut	4
8*	N/A	Adj. Yoke Rod	2
9*	N/A	Adj. Yoke Bracket	1
10*	N/A	Adjusting Screw	4
11	H6662100	Chain Assembly	1
12	H2205500	Saddle	1
13	221798	Retaining Ring	1
14	H2213500	Pin-Side Pivot	1
15	H2205000	Saddle Holder	1
16	H1896000	Hex Jam Nuts	2
17	H6597900	Thrust Bearing	2
18	H6599700	Pin-Forward Tilt	1
19	H5579600	Washer	2
20	221798	Retaining Ring	2
21	H2215500	Pin-Forward Tilt	1
22	H6660700	Adj.Screw Assy. Forward Tilt	1
23	221798	Retaining Ring	2
24	H2213000	Saddle Pivot Pin	1
25	H2216000	Saddle Links	2
26	N/A	Lift Arm Assy.	1

Item	Part#	Description	Qty
28	245012	Wedge	4
29	H2220500	Adj Trans. Plate L.H.	1
30	H2223000	Adj Trans. Plate R.H.	1
31	H2535900	Bolt	8
32	H1103000	Washer	8
33	H2533500	Hex nut	8
34	203301	Jam Nut	4
35	H0249000	Bearings	4
36	245395	Caster Assembly	4
37	N/A	Frame Assembly	1
38	H6599300	Parallel Link spacer	1
39	H2544500	Hex Jam Nut	2
40	H2608400	Cotter Pin	1
41	H2680600	Slotted Hex Nut	1
42	H5579500	.063 Thick Washers	4
43	H2214500	Pin-Side Anchor	1
44	H6599600	Pin-Side Tilt	1
45	H0762000	Adj. Screw Assy. Side	1
46	H6662700	Rivet	1
47	H6598900	Main Pivot Pin	1
48	H1308500	Retaining Ring	2
49	226318	Grease Fitting	1
50	H6665200	Open Eye Bolt	1
51	H2524500	Washer	1
52	H6665300	Wing Nut	1
53	248472	Button Head Screw	4
(*)	HW93249	Attachment Kit	-

(*) Indicates items included in Attachment kit (HW93249)

Model HW93718 Replacement Parts (Hydraulic Unit)

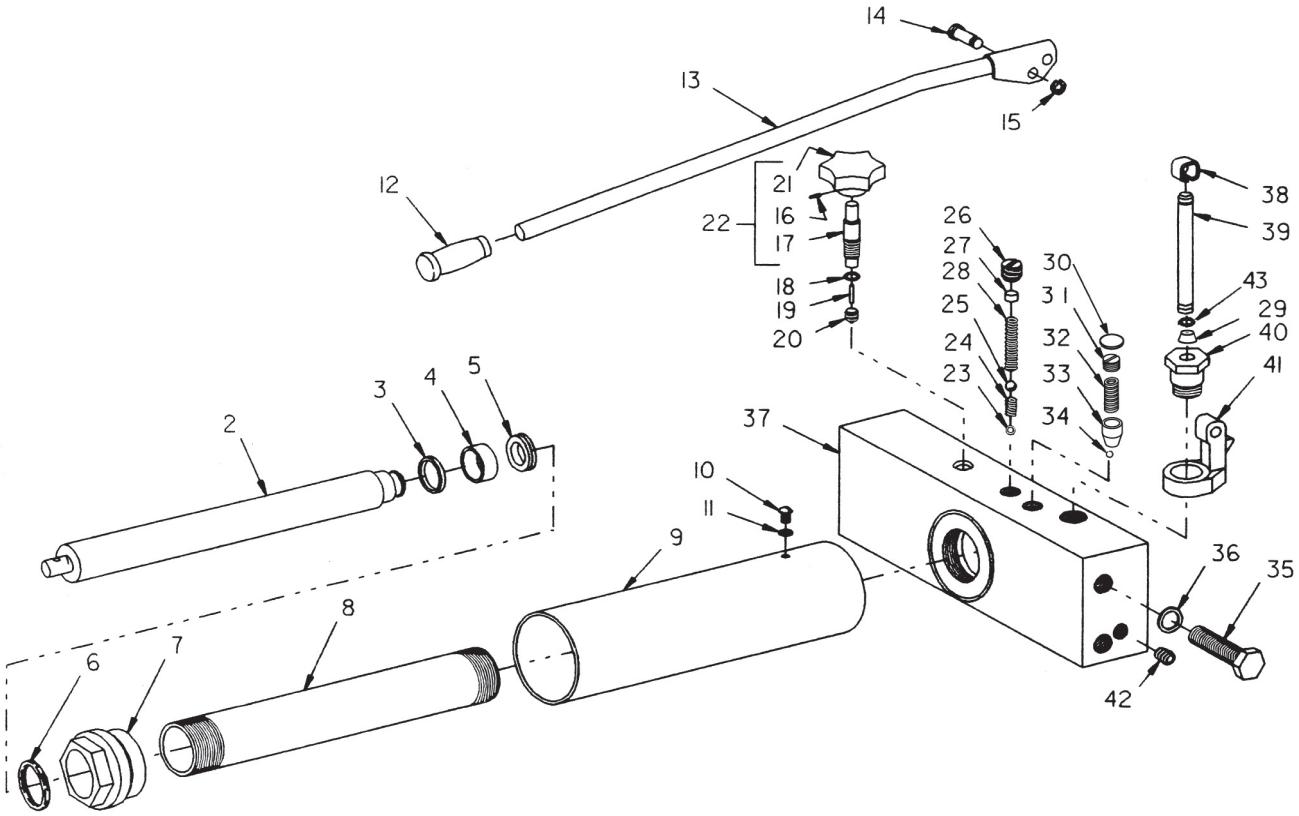

Figure 3 - Parts Illustration for Model HW93718 (Hydraulic Unit)

Item	Part #	Description	Qty
1	261169	Hyd. Unit w/o Handle	1
2	245582	Ram	1
3*	224867	Back- Up Washer	1
4*	224760	Heel Plate	1
5*	227919	U-Cup	1
6*	221748	Quad Ring	1
7	245586	Tank Nut	1
8	245583	Cylinder	1
9	H6599200	Oil Tank	1
10	H6014100	Filler Screw	1
11*	200003	Washer	1
12	H0933000	Handle Grip	1
13	245828	Handle Assembly	1
14	220021	Pin	2
15	220018	Retaining Ring	2
16	217898	Roll Pin	1
17	233920	Release Stem	1
18*	216143	O-ring	1
19*	233917	Plastic Spring	1
20*	212227	Release Valve	1
21	233977	Knob, Release Valve	1
22	234005	Release Stem Assy.	1

Item	Part #	Description	Qty
23*	H0267500	Ball	1
24*	H0218500	Spring	1
25*	H0301000	Ball	1
26	H1185500	Plug	1
27*	H1152000	Valve Seal	1
28*	H2383500	Spring	1
29*	928820	U-Cup	1
30	201733	Expansion Plug	1
31	226373	Adjusting Nut	1
32	226378	Spring	1
33	226376	Spring Cup	1
34	203196	Ball	1
35	245845	Bolt	4
36	H0218000	Lock Washer	4
37	N/A	Unit Block	1
38	209910	Piston Clip	1
39*	928821	Pump Piston	1
40	248909	Pump Guide	1
41	245546	Socket Bracket	1
42	210311	Pipe Plug	1
43*	218776	O-ring	1
(*)	245892	Repair Kit	-

(*) Indicates items included in Repair kit (245892)

HEIN-WERNER AUTOMOTIVE®

SFA Companies
10939 N. Pomona Ave. Kansas City, MO 64153
816-891-6390
customerservices@heinwerner-automotive.com